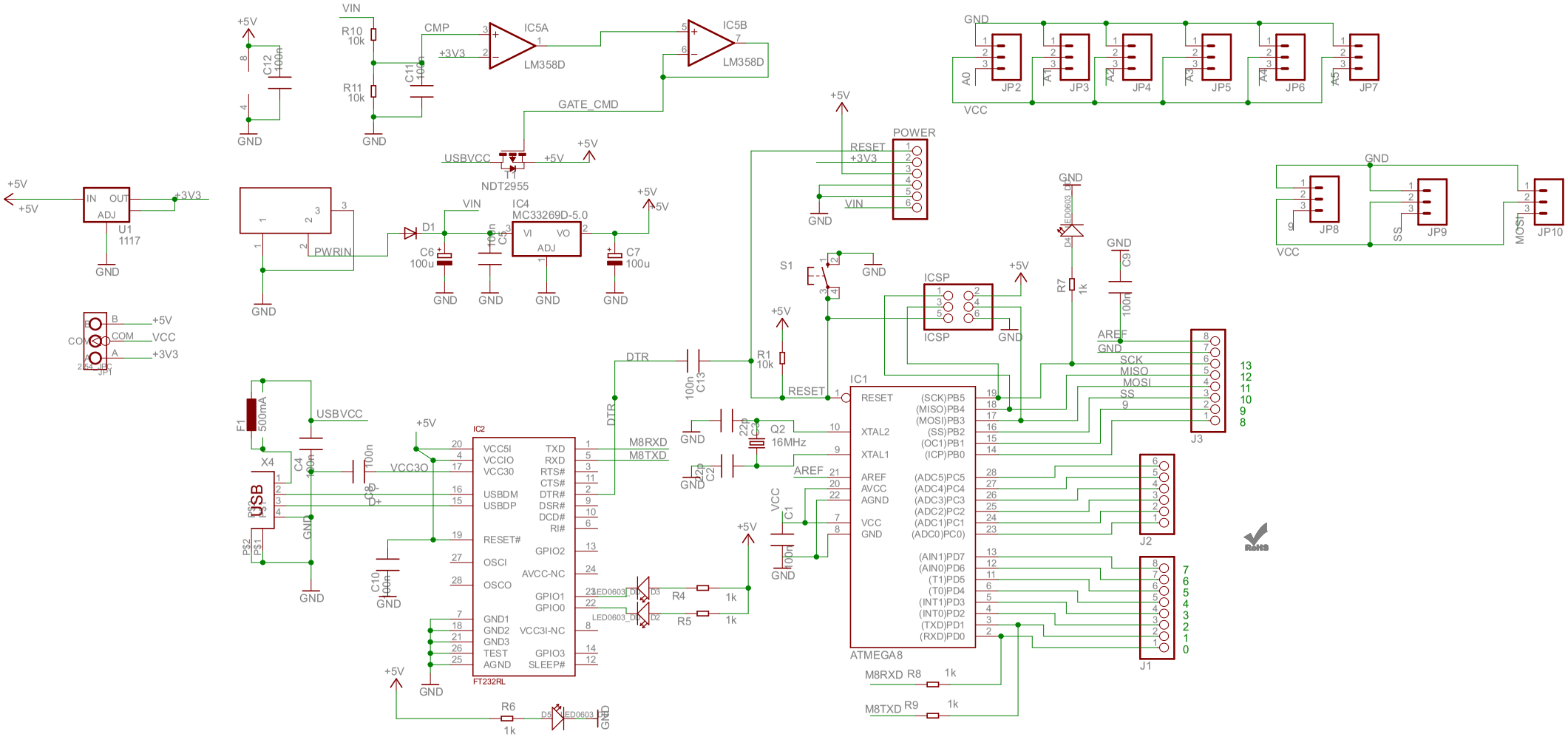

VIN
R10
10k
R11
10k
CMP
+3V3
IC5A
LM358D
IC5B
LM358D
C12
100n
C11
100n
GATE_CMD
USBVCC
+5V
NDT2955
+5V
+5V
IN
OUT
ADJ
U1
1117
+3V3
GND
PWRIN
D1
VIN
IC4
MC33269D-5.0
VI
VO
ADJ
C6
100u
C5
100n
C7
100u
+5V
GND
+5V
POWER
RESET
+3V3
VIN
GND
GND
A0
JP2
A1
JP3
A2
JP4
A3
JP5
A4
JP6
A5
JP7
VCC
GND
JP8
SS
JP9
MOSI
JP10
VCC
S1
GND
ICSP
ICSP
+5V
GND
R7
1k
C9
100n
AREF
GND
SCK
MISO
MOSI
SS
J3
13
12
11
10
9
8
DTR
C13
100n
R1
10k
RESET
IC1
RESET
XTAL2
XTAL1
AREF
AVCC
AGND
VCC
GND
(SCK)PB5
(MISO)PB4
(MOSI)PB3
(SS)PB2
(OC1)PB1
(ICP)PB0
(ADC5)PC5
(ADC4)PC4
(ADC3)PC3
(ADC2)PC2
(ADC1)PC1
(ADC0)PC0
(AIN1)PD7
(AIN0)PD6
(T1)PD5
(T0)PD4
(INT1)PD3
(INT0)PD2
(TXD)PD1
(RXD)PD0
ATMEGA8
Q2
16MHz
22p
C3
22p
C2
GND
AREF
VCC
C1
100n
GND
J2
J1
7
6
5
4
3
2
1
0
F1
500mA
USBVCC
X4
USB
C4
100n
C8
100n
VCC3O
IC2
VCC5I
VCCIO
VCC30
USBDM
USBDP
RESET#
OSCI
OSCO
GND1
GND2
GND3
TEST
AGND
TXD
RXD
RTS#
CTS#
DTR#
DSR#
DCD#
RI#
GPIO2
AVCC-NC
GPIO1
GPIO0
VCC3I-NC
GPIO3
SLEEP#
FT232RL
M8RXD
M8TXD
C10
100n
GND
LED0603_D3
LED0603_D2
R4
1k
R5
1k
+5V
GND
R6
1k
D5
LED0603
GND
M8RXD R8
1k
M8TXD R9
1k